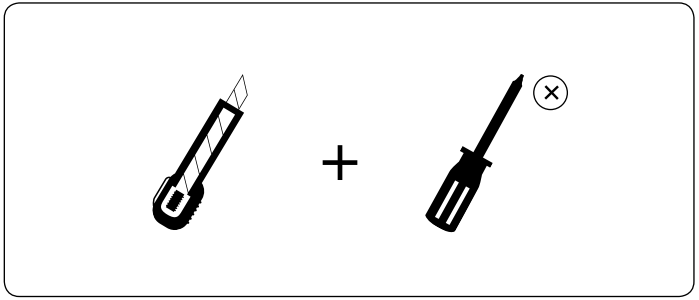

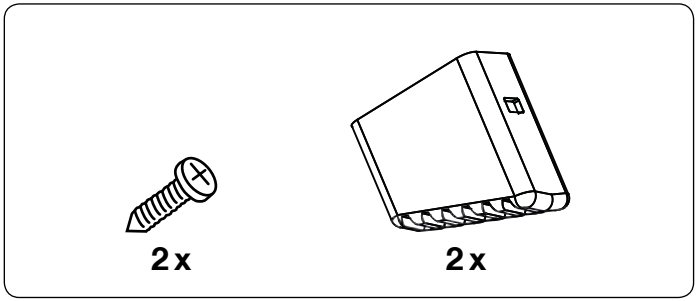

560695 © 2016 Copyright by KRAUSE-Werk • D-36304 Alsfeld • Printed in Germany • Subject to technical changes, errores and misprints.

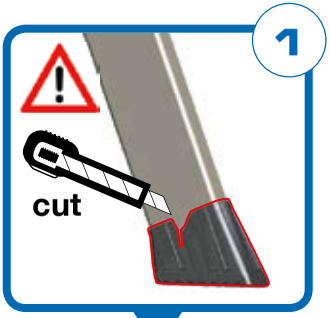
1
cut

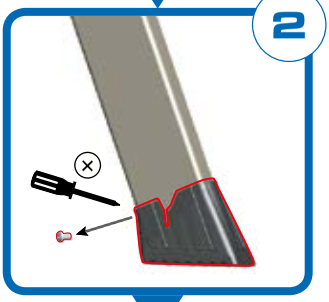
2

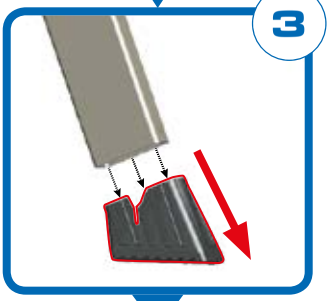
3

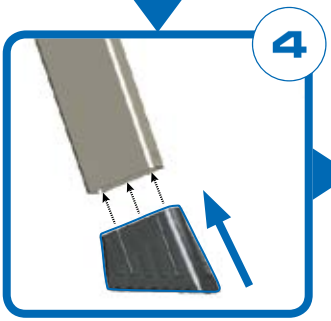
4

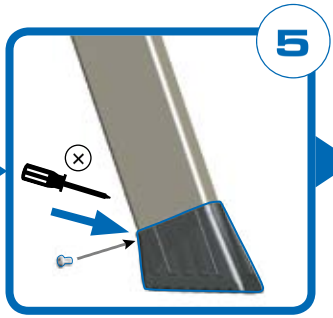
5