Technical information
Explosion drawing and parts list

Hand gluer EM25D (Ref. 2500100)

(*) Parts not mounted in the current version

Pos.	Code	Vrs.	Serie	Item
1	2502103			COVER
2	2528100			SCREW
3	2523115			PLATE
4	2502018			UPPER ROLLER ASS'Y
5	2502135			SHAFT
6	2502177	B0	37900	UPPER ROLLER
7	2506236	D0	65047	HAND GLUER BODY
* 7 -	2545290			HAND GLUER BODY ASS'Y
8	2522124			SHAFT
9	2504067			BASE SUPPORT
10	2502105			LEFT HINGE
11	2524001			SPREADER ROLLER PLATE
12	6478001	C0	64269	SCREW M4X8PH
* 12 -	2070004			PAN HD. TAPPING SCREW 6X1/4 PH.BZ
13	2523112			SPREADER PAWL
14	2502104			RIGHT HINGE
15	2504005			RUBBER ROLLER
15 -	2504065			POLYURETAN ROLLER
16	2502042			ROLLER SHAFT
17	2523114			GLUER BASE
18	2522043			SPREADER ROLLER
19	1025103			KNOB M6X43
20	2585007			HEX. NUT M.10
21	2525006			HANDLE
22	3883002	D0	65047	WASHER AET D.4,3
* 22 -	3580010			WASHER
23	1472017			PAN HD. SCREW M. 4X15 PH.
24	1685018			SQUARE NUT M.4
25	1416095			VIRUTEX LABEL
26	1680026			WASHER
27	2502280	D0	65047	BUSHING
S/P	2594028			CARTON PACKING

Technical information
Explosion drawing and parts list

Hand gluer EM25D (Ref. 2500100)
Edition D

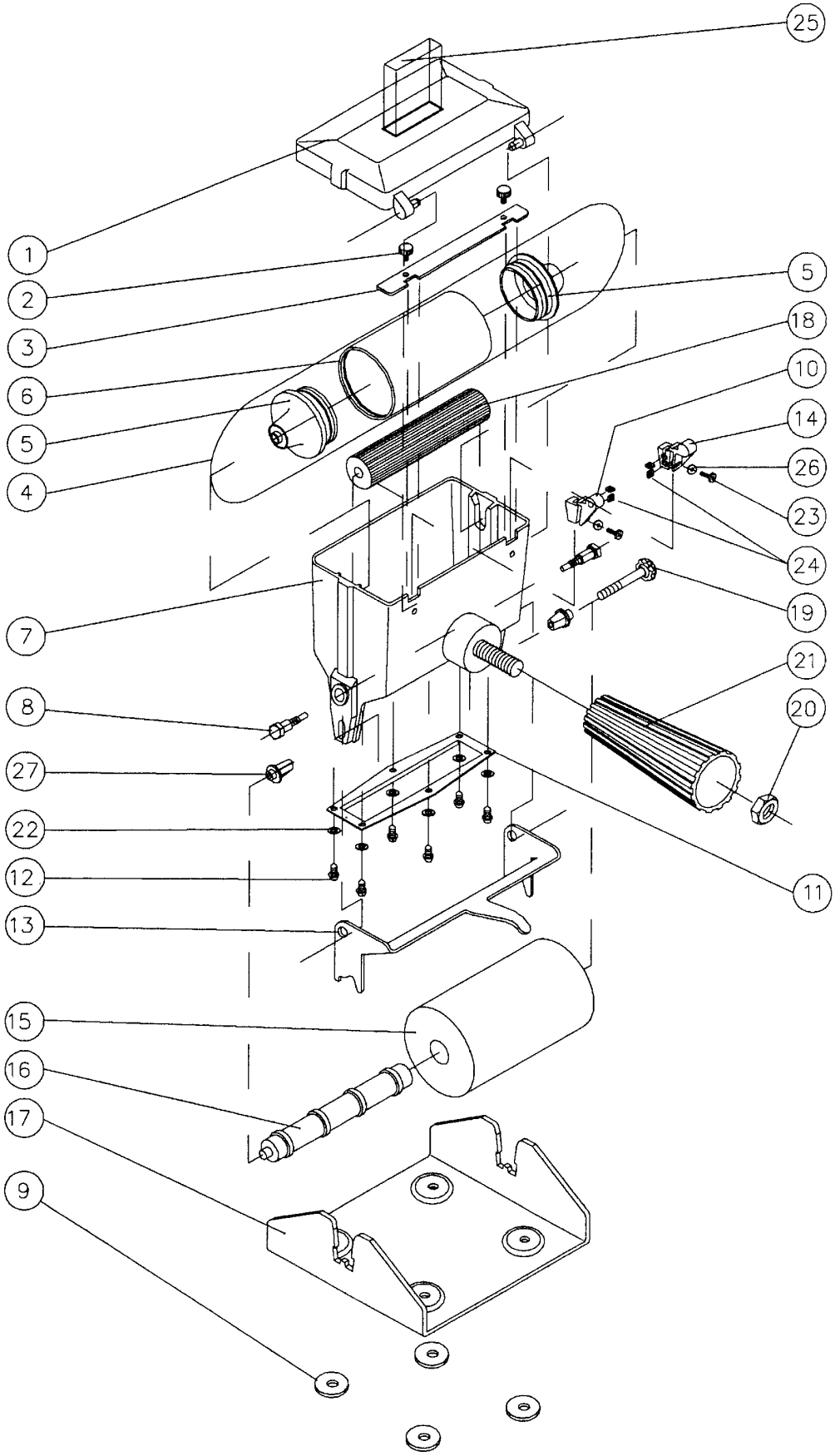

Technical information
Explosion drawing and parts list

Hand gluer EM25D (Ref. 2500100)
Edition C

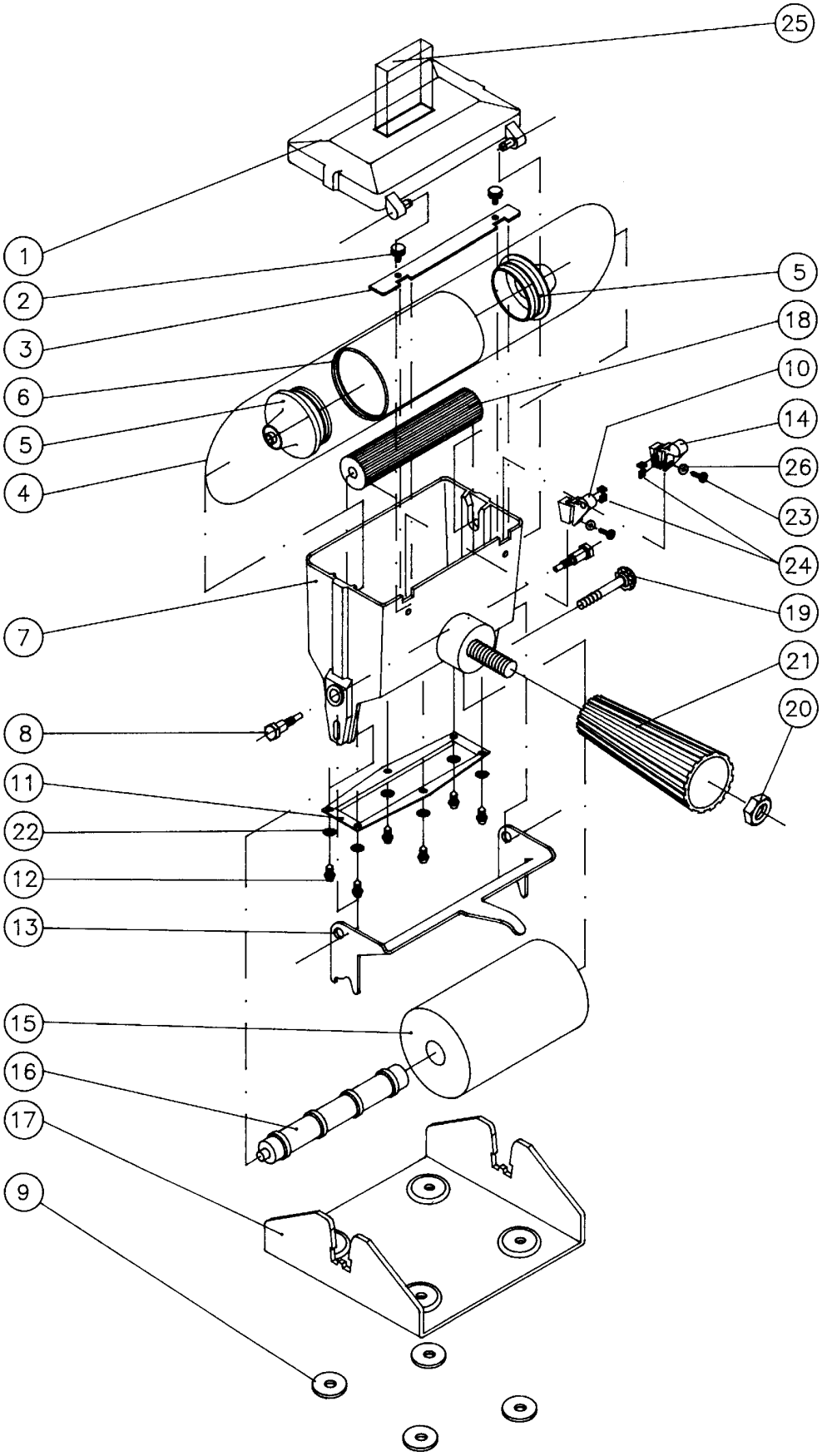

Technical information
Explosion drawing and parts list

Hand gluer EM25D (Ref. 2500100)
Edition B

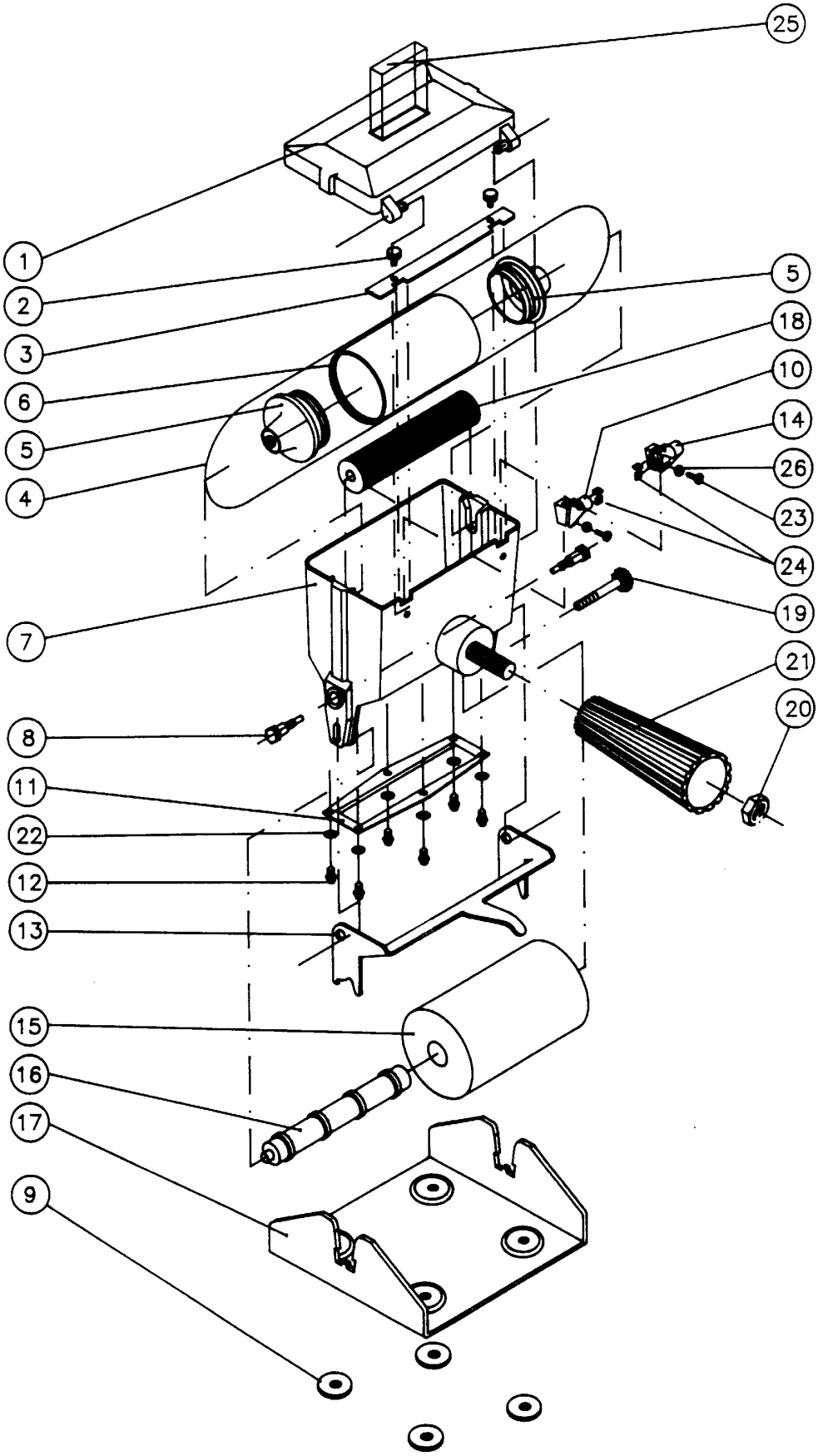

Technical information
Explosion drawing and parts list
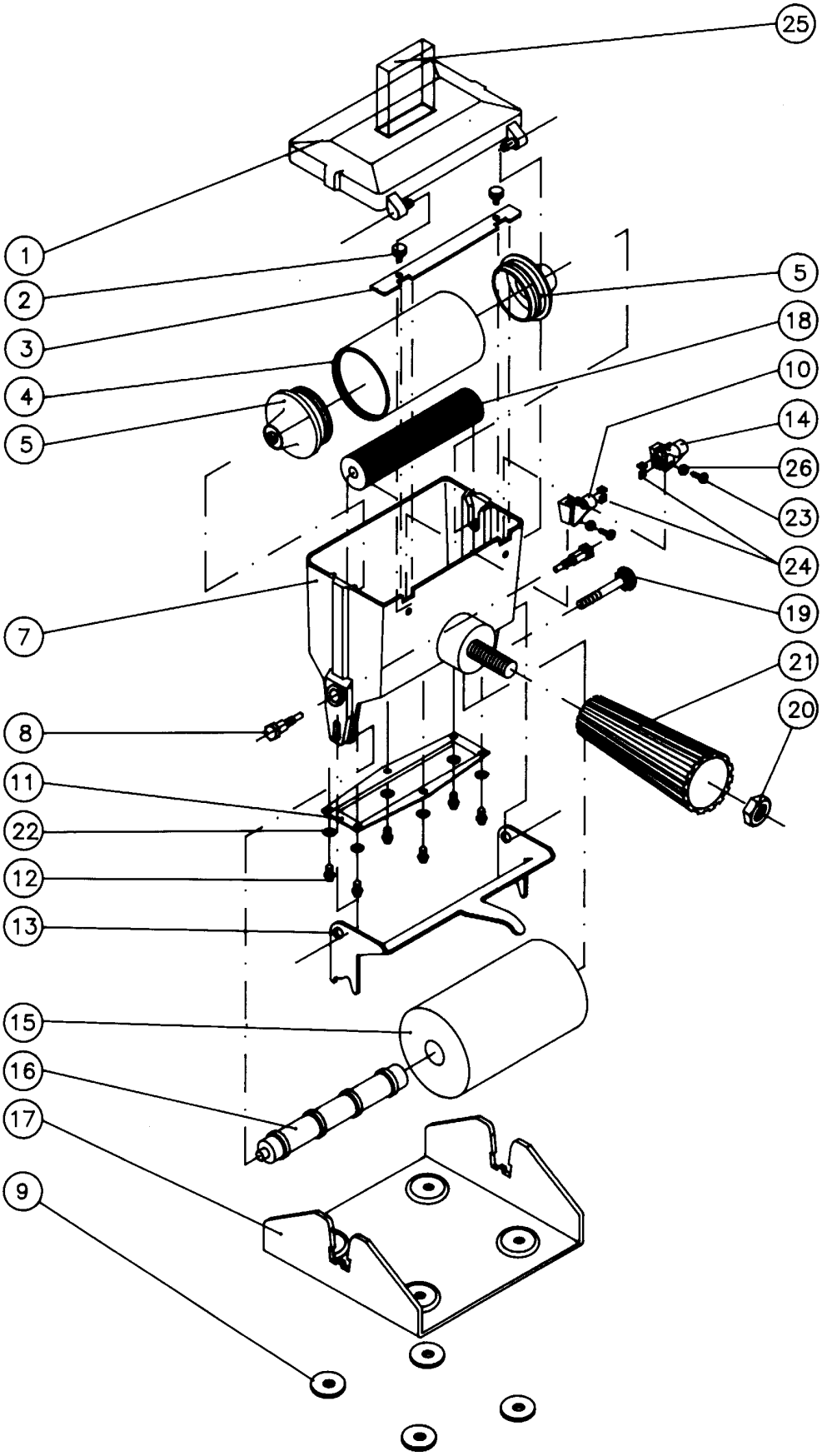
Hand gluer EM25D (Ref. 2500100)
Edition A