FLUKE®

64 Max

IR Thermometer

Instructions

PN 4861406
January 2017
© 2017 Fluke Corporation. All rights reserved. Specifications are subject to change without notice.
All product names are trademarks of their respective companies.

Introduction

The Fluke 64 Max IR Thermometer (the Product) can determine the surface temperature by measuring the amount of infrared energy radiated by the target's surface.

⚠Warning

Read all safety information before you use the Product.

3-Year Limited Warranty. See the Users Manual for the full warranty.

Go to www.fluke.com to read the Users Manual and find more information about the Product. To register your product, visit http://register.fluke.com.To see, print, or download the latest manual supplement, visit http://us.fluke.com/usen/support/manuals.

Safety Information

A **Warning** identifies conditions and procedures that are dangerous to the user. A **Caution** identifies conditions and procedures that can cause damage to the Product or the equipment under test.

⚠⚠Warning

To prevent eye damage and personal injury:

- **Read all safety Information before you use the Product.**
- **Do not use the Product if it operates incorrectly.**
- **Use the Product only as specified, or the protection supplied by the Product can be compromised.**

- **Before you use the Product, inspect the case. Do not use the Product if it appears damaged. Look for cracks or missing plastic.**
- **See emissivity information for actual temperatures. Reflective objects result in lower than actual temperature measurements. These objects pose a burn hazard.**
- **Do not look directly into the laser with optical tools (for example, binoculars, telescopes, microscopes). Optical tools can focus the laser and be dangerous to the eye.**
- **Do not look into the laser. Do not point laser directly at persons or animals or indirectly off reflective surfaces.**
- **Replace the batteries when the low battery indicator shows to prevent incorrect measurements.**
- **Do not use the Product around explosive gas, vapor, or in damp or wet environments.**
- **Use the Product only as specified or hazardous laser radiation exposure can occur.**

⚠Caution

- **To avoid damage to the Product, do not leave the thermometer on or near objects of high temperature.**

Table 1 lists the symbols used on the Product and in this manual.

Table 1. Symbols

Symbol	Meaning	Symbol	Meaning
	WARNING. RISK OF DANGER.		Warning. Laser.
	Consult user documentation.	CE	Conforms to European Union directives.
	Conforms to relevant Australian EMC standards.		
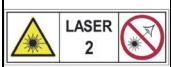	Indicates a Class 2 laser. DO NOT STARE INTO BEAM. The following text may appear with the symbol on the product label: “IEC/EN 60825-1 Complies with 21 CFR 1040.10 and 1040.11 except for deviations pursuant to Laser Notice 50, dated June 24, 2007.” In addition, the following pattern on the label will indicate wavelength and optical power: λ = xxxnm, x.xxmW		
	This product complies with the WEEE Directive marking requirements. The affixed label indicates that you must not discard this electrical/electronic product in domestic household waste. Product Category: With reference to the equipment types in the WEEE Directive Annex I, this product is classed as category 9 "Monitoring and Control Instrumentation" product. Do not dispose of this product as unsorted municipal waste.		

Table 2. Nominal Surface Emissivity

Material	Value	Material	Value
Default****	0.95	Glass	0.85
Aluminum*	0.30	Iron*	0.70
Asbestos	0.95	Lead*	0.50
Asphalt	0.95	Oil	0.94
Brass*	0.50	Paint	0.93
Ceramic	0.95	Plastic**	0.95
Concrete	0.95	Rubber	0.95
Copper*	0.60	Sand	0.90
Food-Frozen	0.90	Steel*	0.80
Food-Hot	0.93	Water	0.93
		Wood	0.94

* Oxidized
** Opaque, over 20 mils
*** Natural
**** Factory Setting

Specifications

Temperature Range	-30 °C to +600 °C
Accuracy (Calibration geometry with ambient temperature 23 °C ±2 °C)	≥0 °C: ±1 °C or ±1 % of reading, whichever is greater ≥ -10 °C to <0 °C: ±2 °C < -10 °C: ±3 °C
Response Time (95 %)	<500 ms (95 % of reading)
Spectral Response	8 microns to 14 microns
Emissivity	0.10 to 1.00
Temperature Coefficient	±0.1 °C/°C or ±0.1 %/°C of reading (whichever is greater)
Optical Resolution	20:1 (calculated at 90 % energy)
Display Resolution	0.1 °C
Repeatability (% of reading)	±0.5 % of reading or ±0.5 °C, whichever is greater
Power	1 AA IEC LR06 Battery
Battery Life	30 hours with laser and backlight on

Weight	255 g
Size	175 x 85 x 75 mm
Operating Temperature	0 °C to 50 °C
Storage Temperature	-20 °C to +60 °C, (without battery)
Operating Humidity	Non Condensing (≤10 °C) ≤90 % RH (at 10 °C to 30 °C) ≤75 % RH (at 30 °C to 40 °C) ≤45 % RH (at 40 °C to 50 °C)
Operating Altitude	2000 meters above mean sea level
Storage Altitude	12 000 meters above mean sea level

Safety

General	IEC 61010-1: Pollution Degree 2
Laser	IEC 60825-1: Class 2, 650 nm, <1 mW
Ingress Protection	IEC 60529: IP54

Electromagnetic Compatibility

International ..... IEC 61326-1: Portable; IEC 61326-2-2; CISPR 11: Group 1, Class A

Group 1: Equipment has intentionally generated and/or uses conductively-coupled radio frequency energy that is necessary for the internal function of the equipment itself.

Class A: Equipment is suitable for use in all establishments other than domestic and those directly connected to a low-voltage power supply network that supplies buildings used for domestic purposes. There may be potential difficulties in ensuring electromagnetic compatibility in other environments due to conducted and radiated disturbances.

Caution: This equipment is not intended for use in residential environments and may not provide adequate protection to radio reception in such environments.

Korea (KCC) .....Class A Equipment (Industrial Broadcasting & Communication Equipment)

Class A: Equipment meets requirements for industrial electromagnetic wave equipment and the seller or user should take notice of it. This equipment is intended for use in business environments and not to be used in homes.

USA (FCC) .....47 CFR 15 subpart B. This product is considered an exempt device per clause 15.103.

Overview

To turn on the Product, pull the trigger.

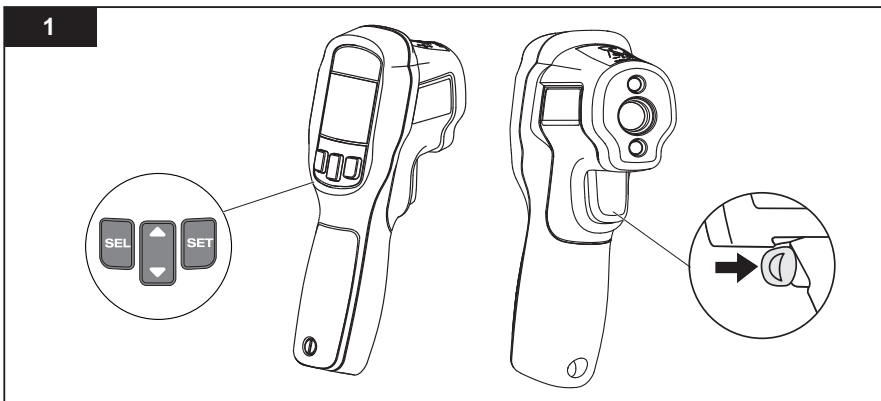

iba02.eps

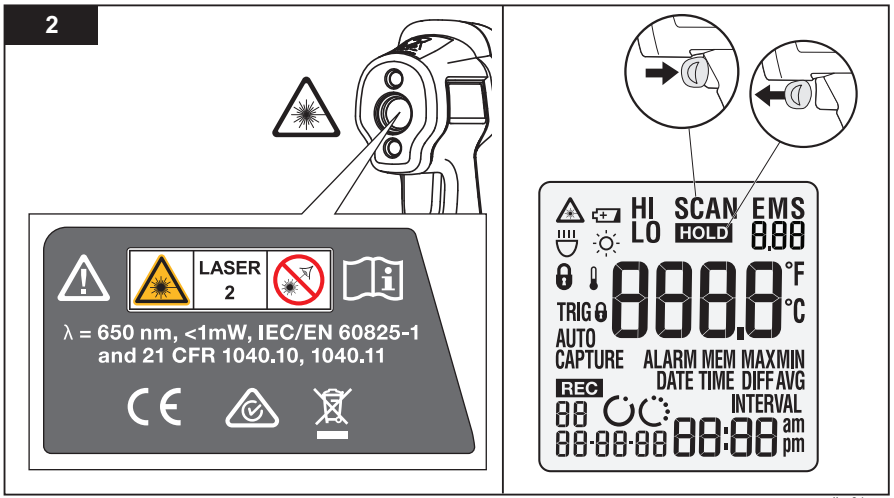
2
LASER
2
λ = 650 nm, <1mW, IEC/EN 60825-1
and 21 CFR 1040.10, 1040.11
HI
LO
SCAN
HOLD
EMS
TRIG
AUTO
CAPTURE
ALARM MEM MAX MIN
DATE TIME DIFF AVG
REC
INTERVAL
°F
°C
am
pm

iba01.eps

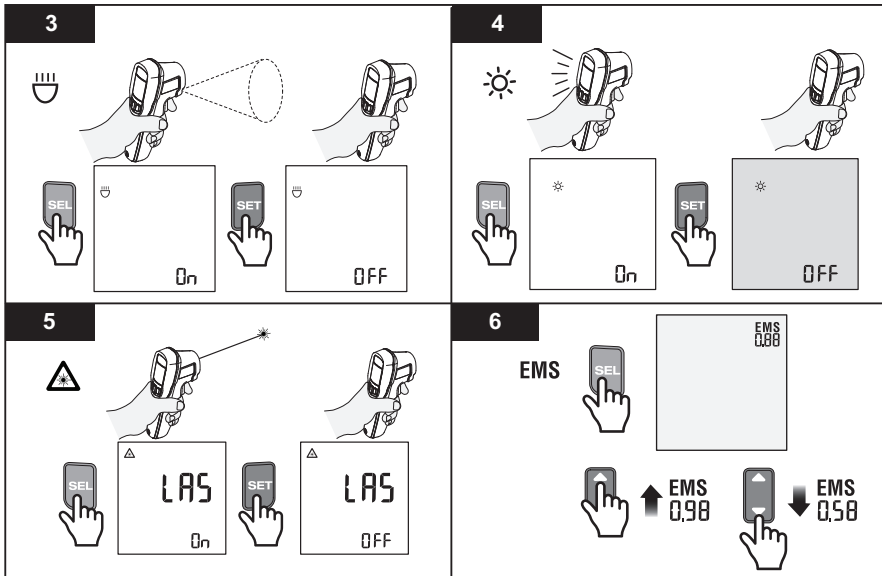
3
SEL
On
SET
OFF
4
SEL
On
SET
OFF
5
SEL
LAS
On
SET
LAS
OFF
6
EMS
SEL
EMS
0,88
EMS
0,98
EMS
0,58

iba14.eps

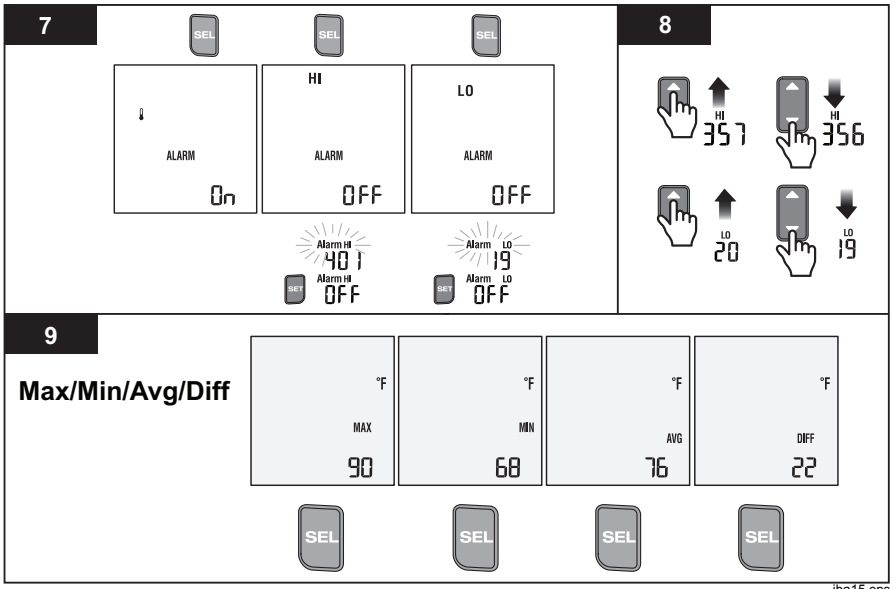
7
SEL
SEL
SEL
HI
LO
ALARM
On
ALARM
OFF
ALARM
OFF
Alarm HI
401
SET
Alarm HI
OFF
Alarm LO
19
SET
Alarm LO
OFF
8
HI
357
HI
356
LO
20
LO
19
9
Max/Min/Avg/Diff
°F
MAX
90
°F
MIN
68
°F
AVG
76
°F
DIFF
22
SEL
SEL
SEL
SEL

iba15.eps

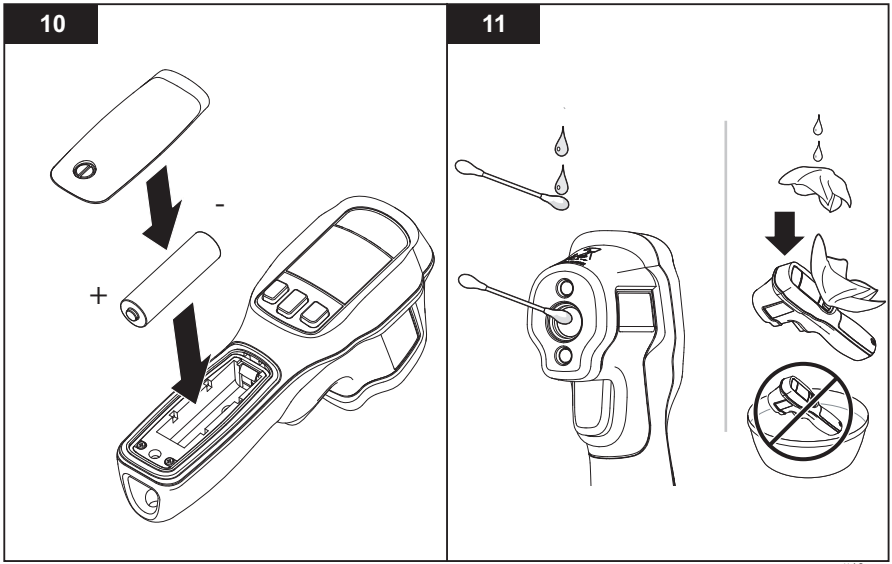

gtt13.eps

12

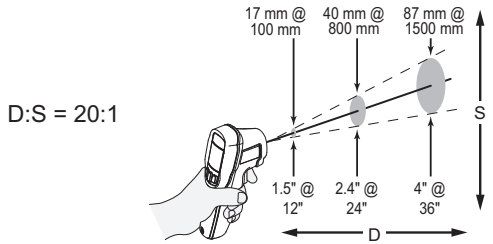

13

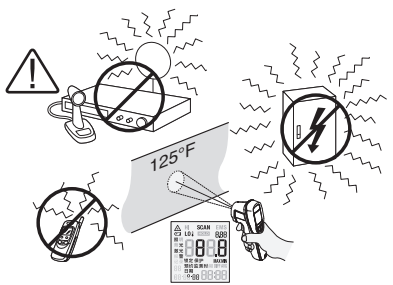

iba17.eps

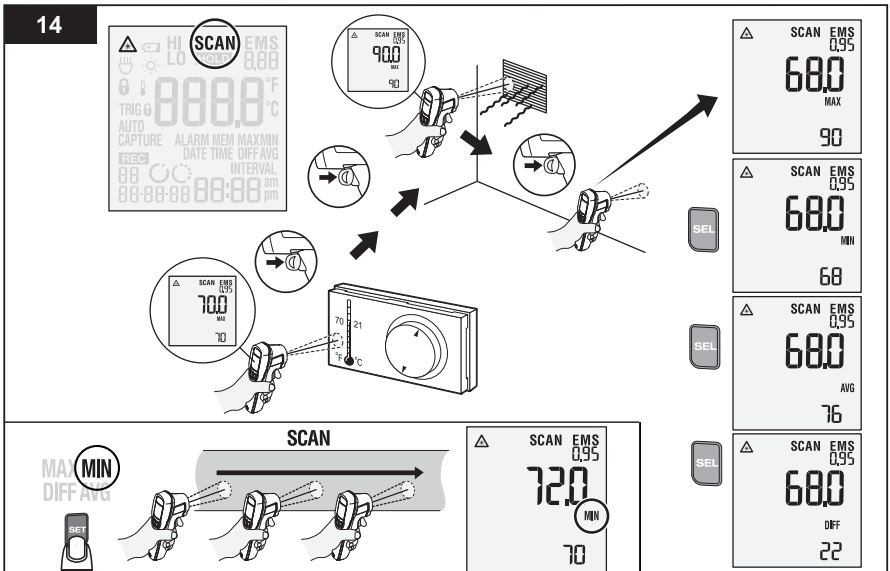
14
SCAN
HI
LO
EMS
8,88
°F
°C
TRIG
AUTO
CAPTURE
ALARM MEM MAXMIN
DATE TIME DIFF AVG
REC
INTERVAL
88
88-88-88
88:88
am
pm
SCAN EMS
0,95
90.0
MAX
90
70.0
MAX
70
70
21
°F
°C
SCAN EMS
0,95
68.0
MAX
90
SCAN EMS
0,95
68.0
MIN
68
SCAN EMS
0,95
68.0
AVG
76
SCAN EMS
0,95
68.0
DIFF
22
SEL
SEL
SEL
SCAN
MAX
MIN
DIFF AVG
SET
SCAN EMS
0,95
72.0
MIN
70

iba03.eps

15

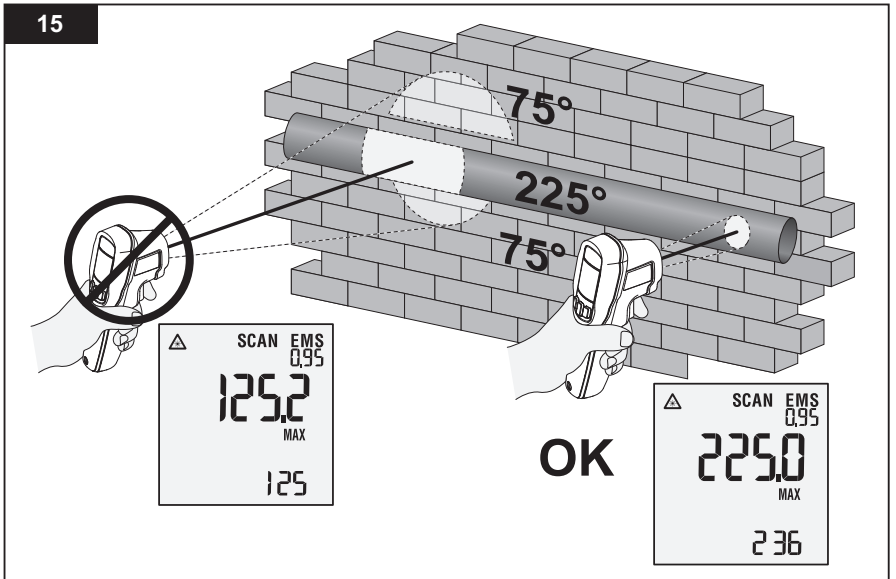

gtt04.eps